# 2×75Ω DRIVER IC WITH 3 INTERNAL CIRCUITS

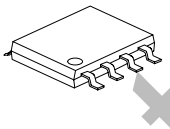

SOP-8

*Pb-free plating product number: A7623L

## ■ DESCRIPTION

The UTC **A7623** is a 75Ω driver-IC. It is a follower for video signals. It can be directly coupled to the previous stage because there is no internal bias at the input pin. When output is short to earth the IC enters power-save mode.

## ■ FEATURES

* Triple channels.
* Can be directly coupled to the previous circuit.
* Each output can drive two loads (75Ω×2).
* Output short circuit protection.

## ■ ORDERING INFORMATION

| Order Number | | Package | Packing |
|---|---|---|---|
| Normal | Lead Free Plating | | |
| A7623-S08-R | A7623L-S08-R | SOP-8 | Tape Reel |
| A7623-S08-T | A7623L-S08-T | SOP-8 | Tube |

| | |
|---|---|
| A7623L-S08-R<br>(1) Packing Type<br>(2) Package Type<br>(3) Lead Plating | (1) R: Tape Reel, T: Tube<br>(2) S08: SOP-8<br>(3) L: Lead Free Plating, Blank: Pb/Sn |

www.signal.com.tr


Copyright © 2005 Unisonic Technologies Co., Ltd

## ■ PIN DESCRIPTIONS

| PIN NO. | PIN NAME | DESCRIPTION |
|---|---|---|
| 1 | GND | Ground connection |
| 2 | IN1 | Direct-coupling input<br>Input composite/component video (RGB) signals.<br>The operating input signal level is 0.5V to 3.8V. |
| 3 | IN2 | |
| 4 | IN3 | |
| 5 | $V_{CC}$ | Power supply |
| 6 | OUT3 | Direct-coupling output<br>When short to ground a protection circuit operates, and the IC enters power-save mode. |
| 7 | OUT2 | |
| 8 | OUT1 | |

## ■ BLOCK DIAGRAM

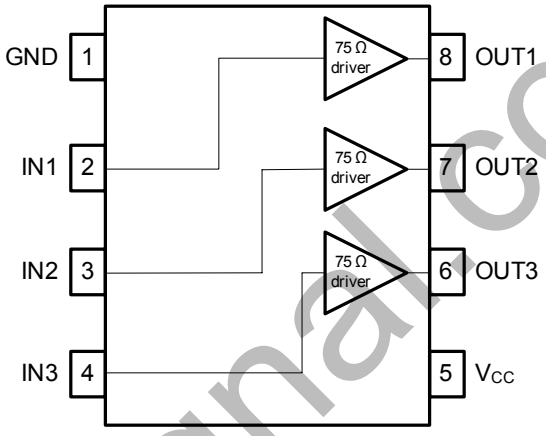


www.signal.com.tr

## ■ ABSOLUTE MAXIMUM RATINGS (Ta = 25℃)

| PARAMETER | SYMBOL | RATINGS | UNIT |
|---|---|---|---|
| Power Supply Voltage | $V_{CC}$ | 8.0 | V |
| Power Dissipation | $P_D$ | 550 | mW |
| Derating Rate at Ta=25°C | | 5.5 | °C/mW |
| Operating Temperature | $T_{OPR}$ | -25 ~ +75 | °C |
| Storage Temperature | $T_{STG}$ | -55 ~ +125 | °C |

Note: Absolute maximum ratings are those values beyond which the device could be permanently damaged. Absolute maximum ratings are stress ratings only and functional device operation is not implied.

## ■ ELECTRICAL CHARACTERISTICS

(Ta = 25°C , $V_{CC}$ = 5V, $V_{IN\ DC}$=2.1V and load is two system drive)

| PARAMETER | SYMBOL | TEST CONDITIONS | MIN | TYP | MAX | UNIT |
|---|---|---|---|---|---|---|
| Operating Voltage | $V_{CC}$ | | 4.5 | 5.0 | 5.5 | V |
| Supply Current | $I_{CC}$ | No signal | | 25.2 | 37.8 | mA |
| Voltage Gain | $G_V$ | f = 1MHz, sine wave ,$V_{IN}$ = 2.0$V_{P-P}$ | -1.0 | -0.5 | 0 | dB |
| Maximum Output Level | $V_{O(MAX)}$ | f = 1kHz, sine wave, THD = 1.0% | 2.9 | 3.4 | | $V_{P-P}$ |
| Frequency Characteristic | $C_F$ | 10MHz / 1MHz, sine wave ,$V_{IN}$ = 1.0$V_{P-P}$ | -3 | 0 | 1 | dB |
| Inter Channel Crosstalk | $C_T$ | f = 4.43MHz, sine wave ,$V_{IN}$ = 2.0$V_{P-P}$ | | -60 | | dB |
| Total Harmonic Distortion | THD | f = 1kHz, sine wave, $V_{IN}$ = 1.0$V_{P-P}$ | | 0.1 | 0.5 | % |
| Differential Gain 75Ω Drive 1 | DG1 | $V_{IN}$ = 2.0VP-P, standard staircase signal | | 0.4 | 1.0 | % |
| Differential Phase 75Ω Drive 1 | DP1 | | | 0.4 | 1.0 | deg |
| Differential Gain 75Ω Drive 2 | DG2 | | | 0.7 | 2.0 | % |
| Differential Phase 75Ω Drive 2 | DP2 | | | 0.7 | 2.0 | Deg |

www.signal.com.tr

## ■ TEST CIRCUIT

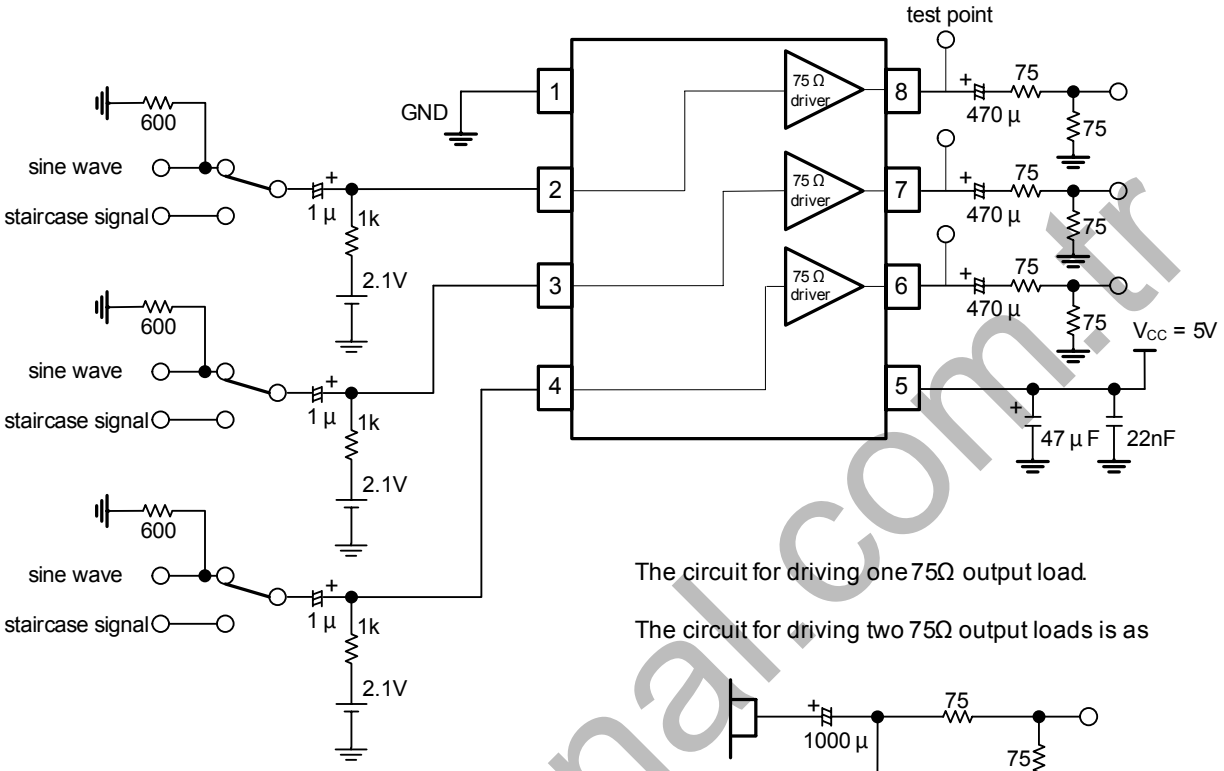


The circuit for driving one 75Ω output load.

The circuit for driving two 75Ω output loads is as

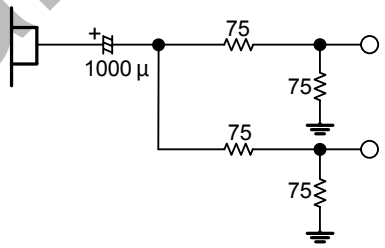


Fig.1

www.signal.com.tr

## ■ APPLICATION CIRCUIT

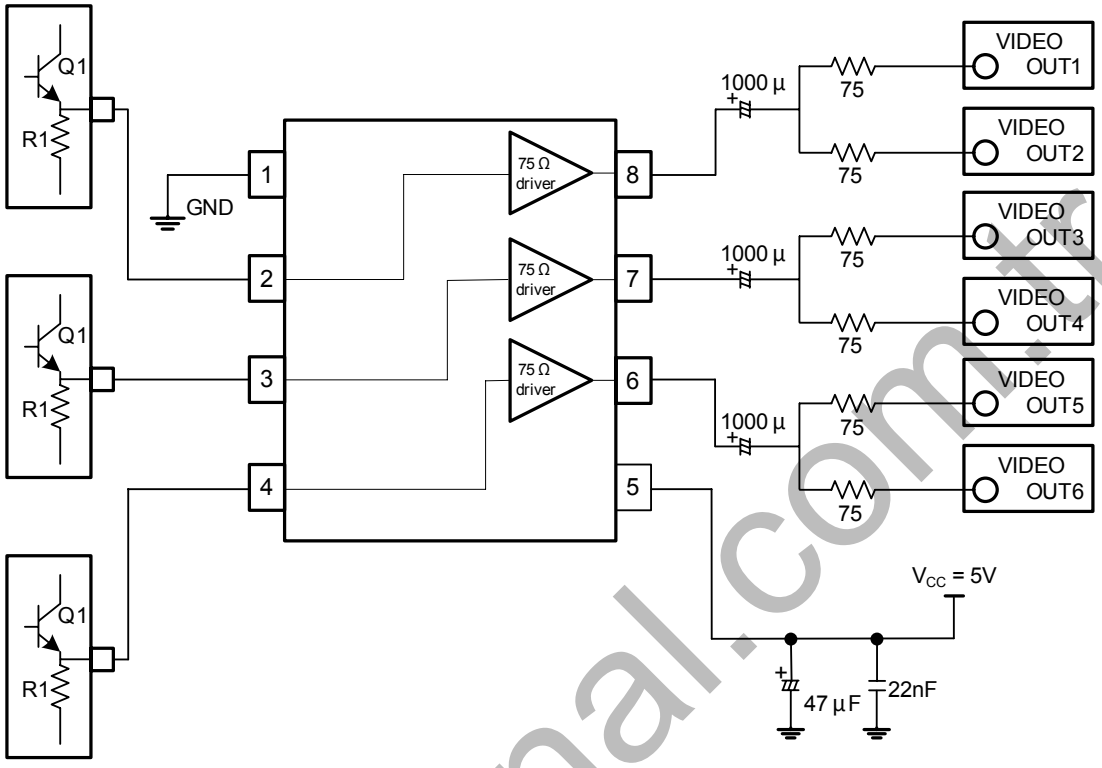


Fig.2

www.signal.com.tr

## ■ TYPICAL CHARACTERISTIC

Fig. 3 Frequency Characteristic

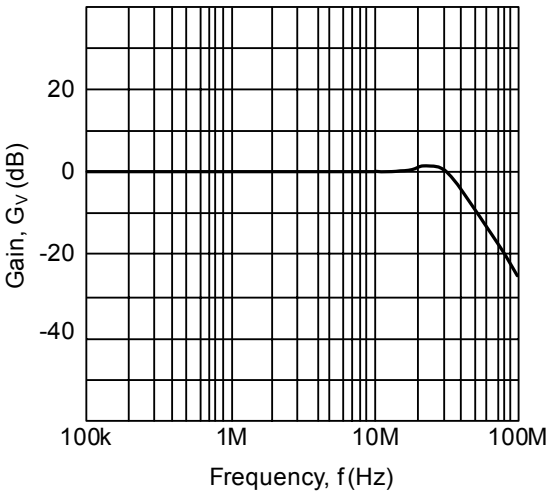


Fig. 4 Crosstalk

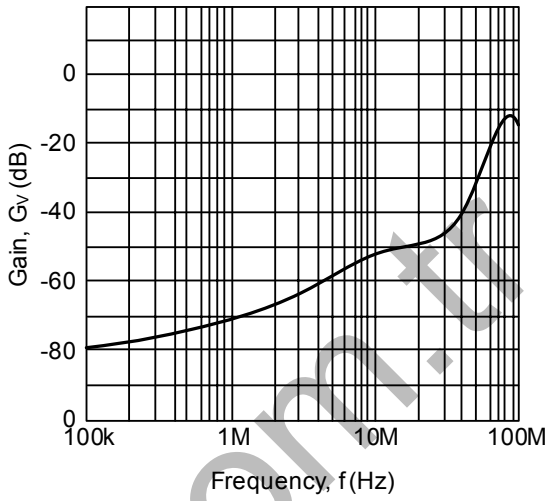


## ■ OPERATION NOTES

(1) The input signals are signals such as composite video signals, or component video (RGB) signals.
(2) When using direct coupling, keep the input signals in the range: 0.5V to 3.8V.

www.signal.com.tw

UTC assumes no responsibility for equipment failures that result from using products at values that exceed, even momentarily, rated values (such as maximum ratings, operating condition ranges, or other parameters) listed in products specifications of any and all UTC products described or contained herein. UTC products are not designed for use in life support appliances, devices or systems where malfunction of these products can be reasonably expected to result in personal injury. Reproduction in whole or in part is prohibited without the prior written consent of the copyright owner. The information presented in this document does not form part of any quotation or contract, is believed to be accurate and reliable and may be changed without notice.