Mechanical Data

Item	Standard Value it	Un
Module Dimension	58.0 x 32.0	mm
Viewing Area	38.0x16.0	mm
Mounting hole	53.0x 27.0	mm
Character Size	2.96 x 5.56	mm

Absolute Maximum Rating

Item	Symbol	Standard Value			Unit
		min.	typ.	max.	
Power Supply	VDD-VSS	-0.3	---	7.0	V
Input Voltage	VI	-0.3	---	VDD	V

Note : VSS=0 Volt, VDD=5.0 Volt.

Electronical Characteristics

Item	Symbol	Condition	Standard Value			U
			min.	typ.	max.	
Input Voltage	VDD	VDD=+5V	4.7	5.0	5.3	V
Supply Current	IDD	VDD=+5V	---	1.5	1.7	mA
Recommended LC Driving Voltage for Normal Temp. Version module	VDD-V0	-20°C	4.9	5.2	5.5	V
		0°C	4.5	4.8	5.1	
		25°C	4.1	4.4	4.7	
		50°C	3.8	4.2	4.4	
		70°C	3.5	4.0	4.1	
LED Forward Voltage	VF	25°C	---	4.2	4.6	V
LED Forward Current	IF	25°C	---	70 A	140	mA
EL Power Supply Current	IEL	Vel=110VAC;400Hz	---	---	5.0	mA

Display Character Address Code:

Display position	1	2	3	4	5	6	7	8
DD RAM Address	00	01						07
DD RAM Address	40	41						47

Feature

1. 5x8 dots includes cursor
2. Built- in controller (ST 7066 or Equivalent)
3. +5V power supply
4. 1/16 duty cycle
5. LED can be driven by pin1, pin2, or A and K

Pin NO.	Symbol	Description
1	VSS	Ground
2	VDD	Supply Voltage for logic+5V
3	VO	Operating voltage for LCD
4	RS	H: DATA, L: Instruction code
5	R/W	H: Read(MPU→Module) L: Write(MPU→Module)
6	E	Chip enable signal
7	DB0	Data bus line
8	DB1	Data bus line
9	DB2	Data bus line
10	DB3	Data bus line
11	DB4	Data bus line
12	DB5	Data bus line
13	DB6	Data bus line
14	DB7	Data bus line
15	A	LED+
16	K	LED-

Character type

RC0802A1 Character 8x2 dots

Dimension drawing

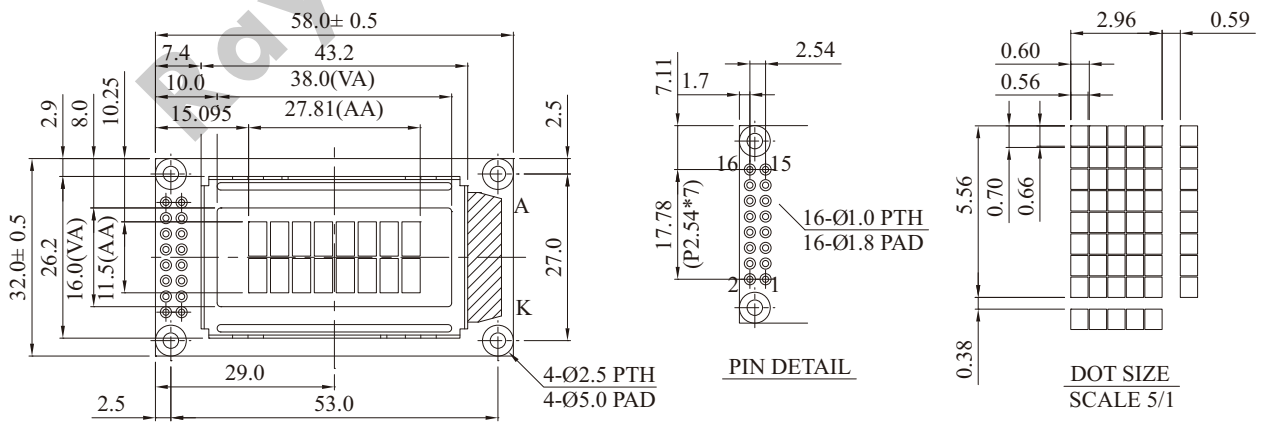

Raystar Optronics, Inc.