SIM / Mini SD / Micro Card Conn. Series

Material
Insulator Material:LCP On Cover , PPS On Body
Contact Material:Copper Alloy
Finish:Gold Flash, 15u", 30u"

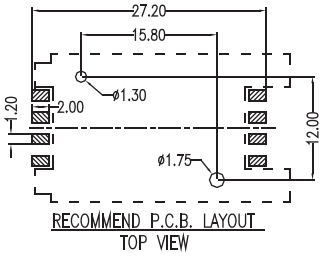

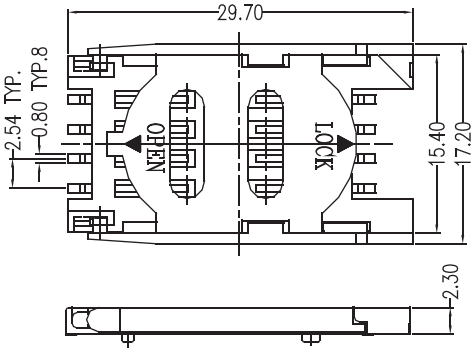

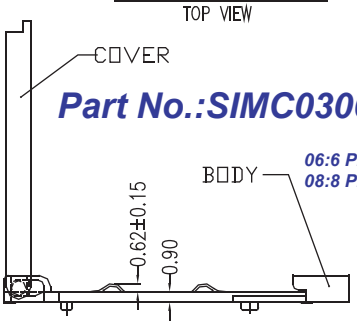

Part No.:SIMC0300-□□ □□B□ □-U

- 06:6 PIN / 08:8 PIN
- G:Gold Flash / GF:Gold 15u" / GD:Gold 30u"
- T:Tube / R:Taping & Reel
- 1:WITH POST / 2:W/O POST

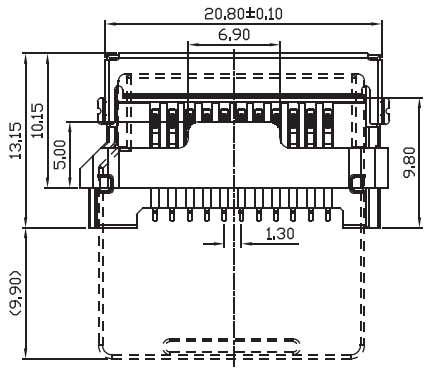

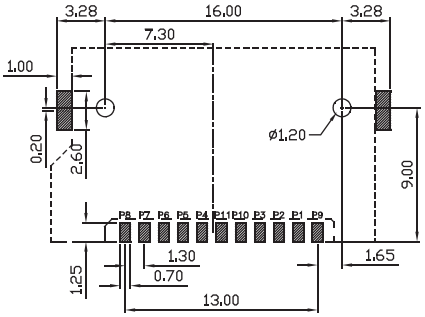

Recommended PCB Layout
(PCB TOLERANCE ±0.05)

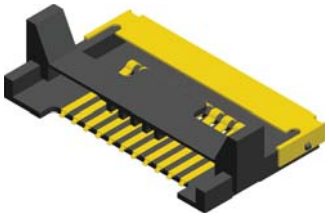

Material
Insulator Material:LCP,UL 94V-0
Contact Material:Copper Alloy
Finish:Gold Plated 10u"

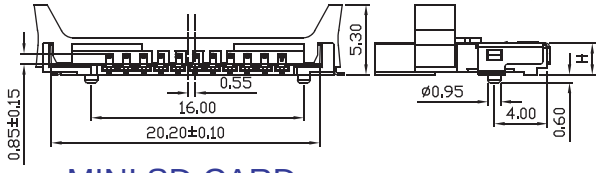

MINI SD CARD

Part No.:MSDC0201-□□ 11GBB-U

- 22:Plastic Height H=2.2mm
- 24:Plastic Height H=2.4mm

Material
Insulator Material:LCP,UL 94V-0
Contact Material:Copper Alloy
Finish:Gold Plated 10u"

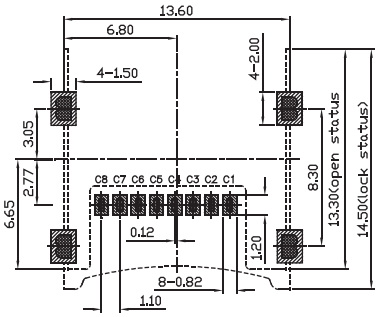

Recommended PCB Layout
(PCB TOLERANCE ±0.05)

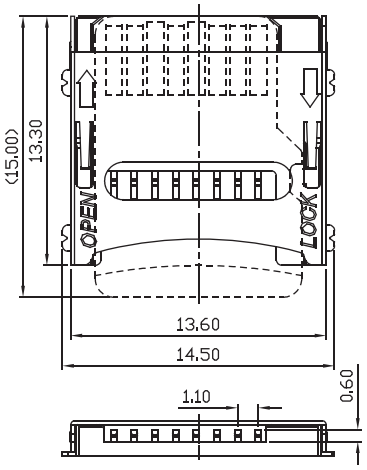

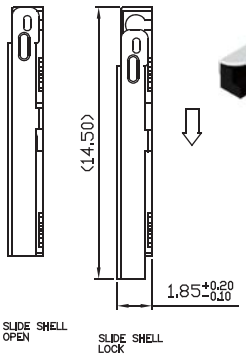

MICRO SD CARD(T-Flash)

Part No.:TSDC0201-08GBB-U