5.0A SCHOTTKY BARRIER RECTIFIER

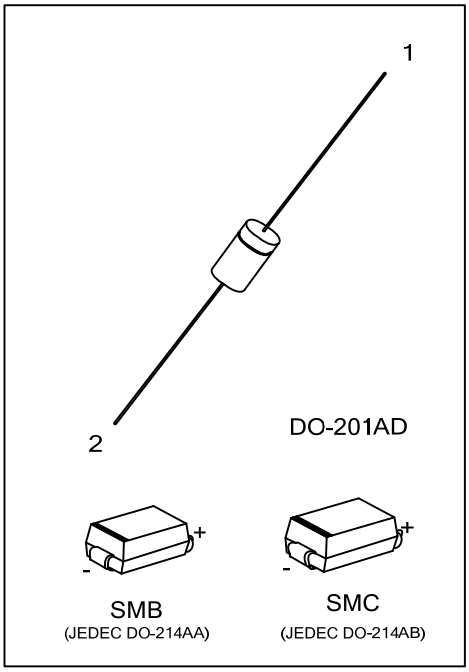

■ DESCRIPTION

The UTC **SB540** is 5.0A schottky barrier rectifier. it uses UTC's advanced technology to provide customers with high current capability and low forward voltage drop, etc.

The UTC **SB540** is suitable for free wheeling, low voltage and polarity protection applications, etc.

■ FEATURES

* Metal to silicon rectifier, majority carrier conduction.
* For use in low voltage, high frequency inverters free wheeling, and polarity protection applications.
* Low power loss, high efficiency.
* High current capability, low V_F.
* High surge capacity.

■ ORDERING INFORMATION

Ordering Number		Package	Pin Assignment		Packing
Lead Free	Halogen Free		1	2	
SB540L-SMB-R	SB540G-SMB-R	SMB	K	A	Tape Reel
SB540L-SMC-R	SB540G-SMC-R	SMC	K	A	Tape Reel
SB540L-Z21D-R	SB540G-Z21D-R	DO-201AD	K	A	Tape Reel

Note: Pin Assignment: A: Anode, K: Cathode

SB540L-SMB-R
(1)Packing Type
(2)Package Type
(3)Lead Free

(1) R: Tape Reel
(2) SMB: SMB, SMC: SMC, Z21D: DO-201AD
(3) L: Lead Free, G: Halogen Free

■ MARKING INFORMATION

PACKAGE	MARKING
SMB SMC	Cathode Band for uni-directional Only UTC □□□ SB540□ Date Code L: Lead Free G: Halogen Free
DO-201AD	Cathode Band for uni-directional Only UTC SB540□ □□□□ L: Lead Free G: Halogen Free Date Code

Copyright © 2014 Unisonic Technologies Co., Ltd

■ ABSOLUTE MAXIMUM RATINGS (T_A=25°C unless otherwise specified.)(Note 2)

PARAMETER		SYMBOL	RATINGS	UNIT
DC Blocking Voltage		V_R	40	V
Peak Repetitive Reverse Voltage		V_{RRM}	40	V
Working Peak Reverse Voltage		V_{RWM}	40	V
RMS Reverse Voltage		$V_{R(RMS)}$	28	V
Average Rectified Output Current		I_O	5.0	A
Non-repetitive Peak Forward Surge Current 8.3 ms Single Half-Sine-Wave		I_{FSM}	150	A
Power Dissipation	SMB/SMC	P_D	3.7	W
	DO-201AD		5.0	
Junction Temperature		T_J	-65 ~ +150	°C
Storage Temperature		T_{STG}	-65 ~ +150	°C

Notes: 1. Absolute maximum ratings are those values beyond which the device could be permanently damaged. Absolute maximum ratings are stress ratings only and functional device operation is not implied.
2. These ratings are limiting values above which the serviceability of any semiconductor device may be impaired.

■ THERMAL DATA

PARAMETER		SYMBOL	RATINGS	UNIT
Junction to Ambient (Note 3)	SMB/SMC	θ_{JA}	75	°C/W
	DO-201AD		40	

■ ELECTRICAL CHARACTERISTICS (T_A=25°C unless otherwise specified.)

PARAMETER	SYMBOL	TEST CONDITIONS	MIN	TYP	MAX	UNIT
Reverse Breakdown Voltage (Note 1)	$V_{(BR)R}$	I_R=0.50mA	40			V
Forward Voltage Drop	V_{FM}	I_F=5.0A, T_J=25°C			0.55	V
		I_F=5.0A, T_J=100°C			0.50	V
Leakage Current (Note 1)	I_{RM}	V_R=40V, T_J=25°C			0.50	mA
		V_R=40V, T_J=100°C			50	mA

Notes: 1. Short duration pulse test used to minimize self-heating effect.
2. Thermal resistance junction to case mounted on heatsink.
3. 1 inch square pad size (1×0.5 inch for each lead) on FR4 board.

UTC assumes no responsibility for equipment failures that result from using products at values that exceed, even momentarily, rated values (such as maximum ratings, operating condition ranges, or other parameters) listed in products specifications of any and all UTC products described or contained herein. UTC products are not designed for use in life support appliances, devices or systems where malfunction of these products can be reasonably expected to result in personal injury. Reproduction in whole or in part is prohibited without the prior written consent of the copyright owner. The information presented in this document does not form part of any quotation or contract, is believed to be accurate and reliable and may be changed without notice.