DACO®

SR30120CT

30A Power pack Schottky Barrier Rectifier

■ **Productor Character**

- Multilayer Metal -Silicon Potential Structure.
- Low Leakage Current.
- High Current Capability, High Efficiency.
- High Junction Temperature Capability.
- RoHS Product.
- Compliance with EU REACH.

■ **Primary Use**

- Low Voltage High Frequency Switching Power Supply.
- Low Voltage High Frequency Invers Circuit.
- Low Voltage Continued Circuit and Protection Circuit.

■ **Summarize**

- SR30120CT Device optimized for ultra-low forward voltage drop to maximize efficiency in Power Supply applications.

Package:TO-220AB

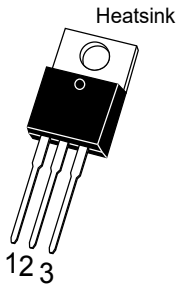

■ **Equivalent Circuit**

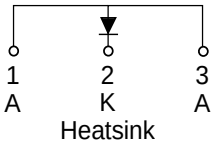

Absolute Maximum Ratings(Ta=25°C unless otherwise noted)

Item		Symbol	Data	Unit
Maximal Inverted Repetitive Peak Voltage		V_{RRM}	120	V
Average Rectified Forward Current(Rated VR-20Khz Square Wave)-50% duty cycle		I_{FAV}	30	A
Forward Peak Surge Current(Rated Load 8.3 Half Mssine Wave-According to JEDEC Method)		I_{FSM}	240	A
Operating Junction Temperature		T_J	-40～150	**°C**
Storage Temperature		T_{STG}	-40～150	**°C**
Typical Thermal Resistance(per leg)	Package=TO-220AB	$R_{\theta JC}$	2	**°C/W**

Electricity Character Per Diode(Ta=25°C unless otherwise noted)

Item	Test Condition	Value(min)	Value(typ)	Value(max)	Unit
V_B	Tj=25°C,IR=1mA	120	—	—	V
I_R	Tj=25°C,VR=120V	—	—	20	μA
	Tj=100°C,VR=120V	—	—	10	mA
V_F	Tj=25°C,IF=30A	—	0.92	0.96	V
	Tj=125°C,IF=30A	—	—	0.85	V
C_J	Tj=25°C,VR=4V,f=1MHz	—	1300	—	pF

Typical Characteristics Curves

Fig1.Typical Forward Current and Forward Voltage

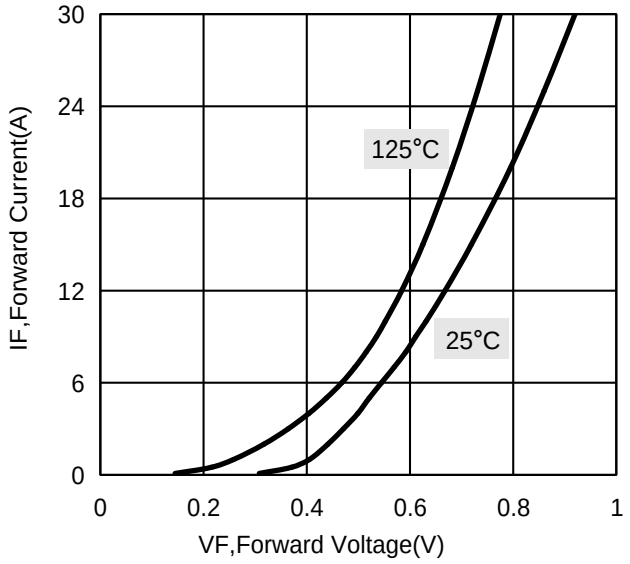

Fig2.Typical Current Derating Curve,Perelement

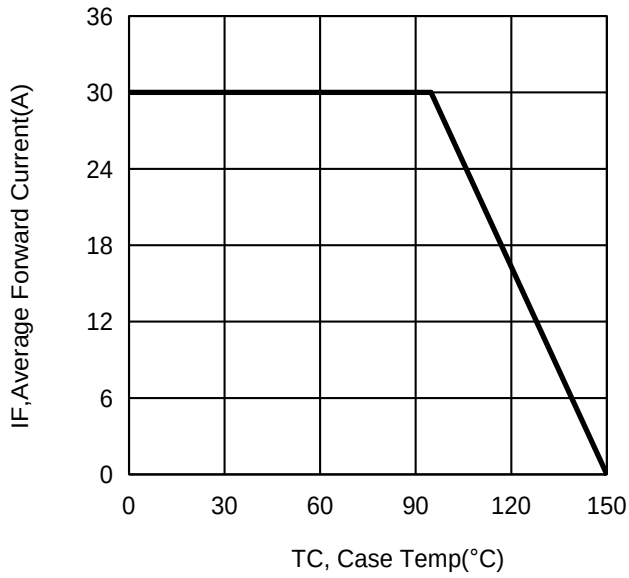

Fig3.Typical Reverse Current and Reverse Voltage

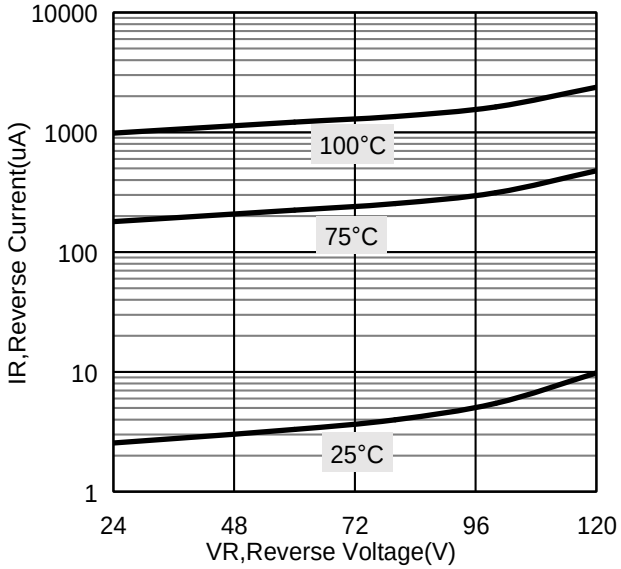

Fig4.Typical Junction Capacitance and Reverse Voltage

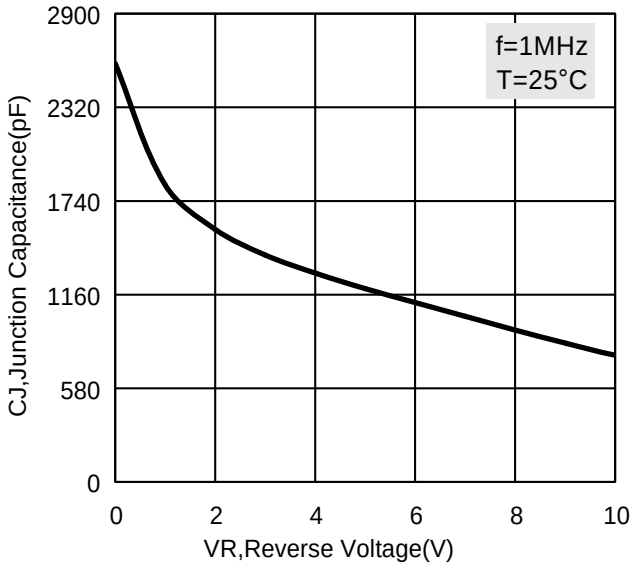

Package Outline Dimensions

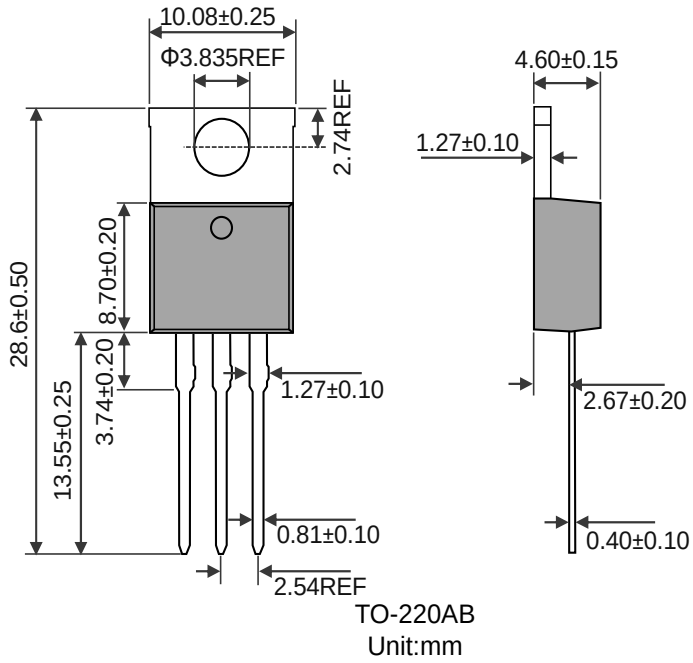

TO-220AB
Unit:mm

Packing Information

Packaging	Part Number	Quantity(pcs)	Size(mm)
Tube	Tube	50	L534×W33×H7
	Inner Box	1000	L560×W150×H40
	Outer Box	5000	L570×W235×H175

Packaging:Tube

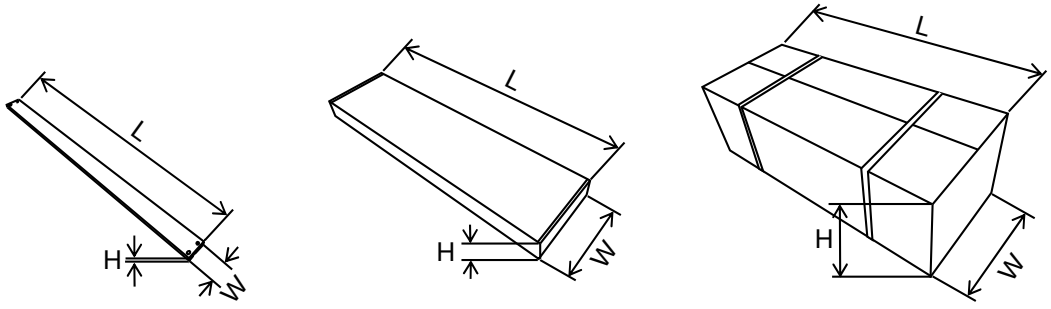

Tube　　Tube Inner Box　　Tube Outer Box

Disclaimer

DACO Semiconductor reserves the right to make modifications, enhancements, improvements, corrections, or other changes to this document and any product described herein without prior notice.For the most up-to-date version, please visit our website.

DACO Semiconductor makes no warranty, representation, or guarantee regarding the suitability of its products for any particular purpose, nor does DACO Semiconductor assume any liability arising out of the application or use of any product or circuit, and specifically disclaims any liability, including without limitation special, consequential or incidental damages.

Purchasers are responsible for its products and applications using DACO Semiconductor products, including compliance with all laws, regulations, and safety requirements or standards, regardless of any support or application information provided by DACO Semiconductor. “Typical” parameters that may be provided in DACO Semiconductor datasheets and/or specifications can and do vary in different applications and actual performance may vary over time. All operating parameters, including “Typical” must be validated for each customer application by the customer’s technical experts.

DACO Semiconductor products are not designed, authorized, or warranted to be suitable for use in life support, life-critical or safety-critical systems, or equipment, nor in applications where failure or malfunction of DACO Semiconductor’s product can reasonably be expected to result in personal injury, death or severe property or environmental damage. DACO Semiconductor accepts no liability for the inclusion and/or use of DACO Semiconductor’s products in such equipment or applications and therefore such inclusion and/or use is at the customer’s own risk.

Purchasers who buy or use DACO Semiconductor products for any unintended or unauthorized applications are required to indemnify and absolve DACO Semiconductor, its suppliers, and distributors from any claims, costs, damages, expenses, and reasonable attorney fees arising out of, directly or indirectly, any claim of personal injury or death associated with such unintended or unauthorized use, even if such claim alleges that DACO Semiconductor was negligent regarding the design or manufacture of the part.

No part of this publication may be reproduced or transmitted in any form or by any means, electronic or mechanical, including photocopying and recording, or by any information storage and retrieval system, or otherwise, without the prior written permission of DACO Semiconductor Co., Ltd.